Mini JCM by dreamtone.org Use at own risk Caution High Voltage

Sound Bites Click Here: http://www.dreamtone.org/Mini_JCM800_2204.htm#14

15 - 20watts

Output Transformer not shown

11/01/2006

Layout and Design by Robert Souza All Rights Reserved © 2008

Drawn By: Robert Souza
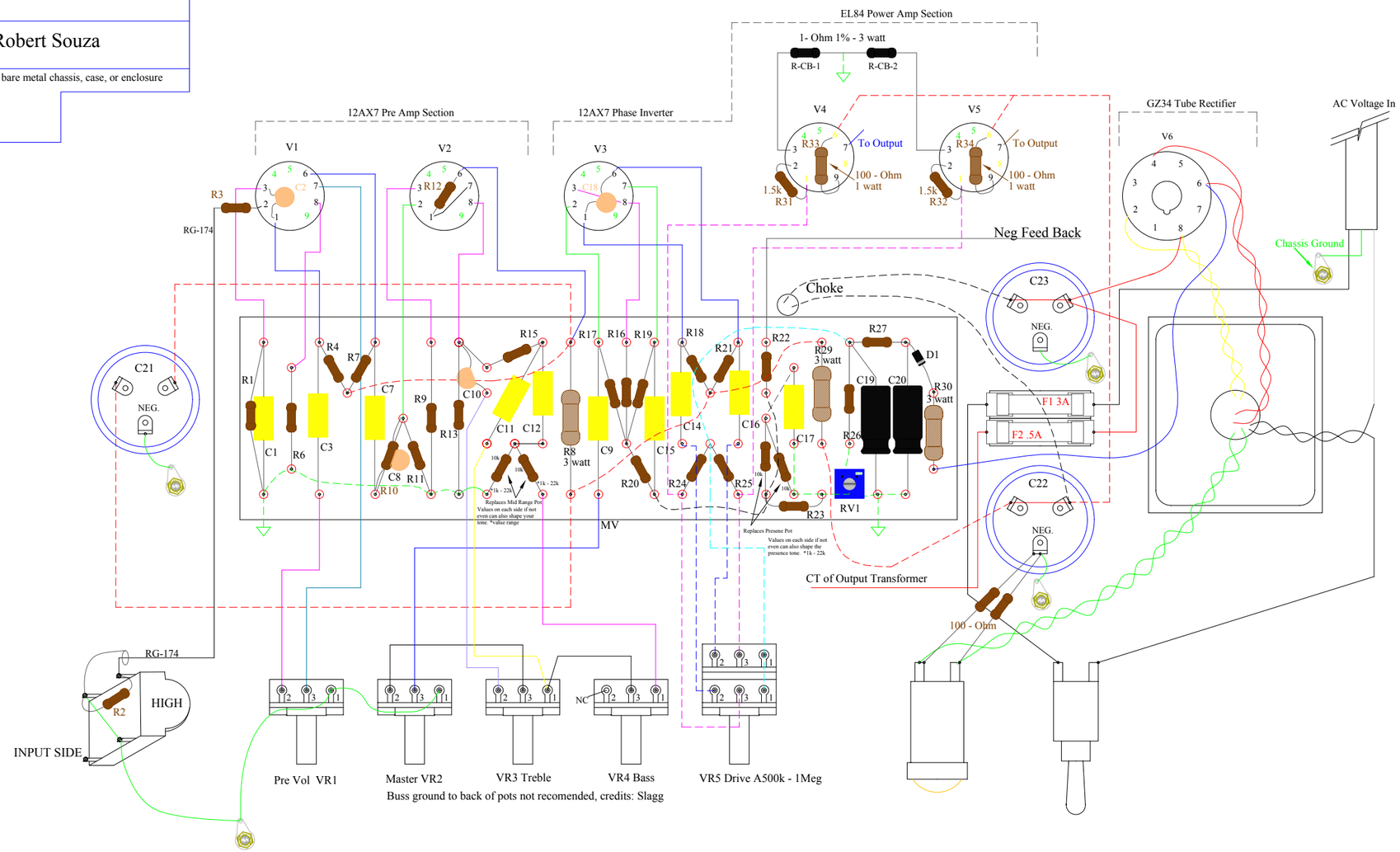
This means bolted down to bare metal chassis, case, or enclosure