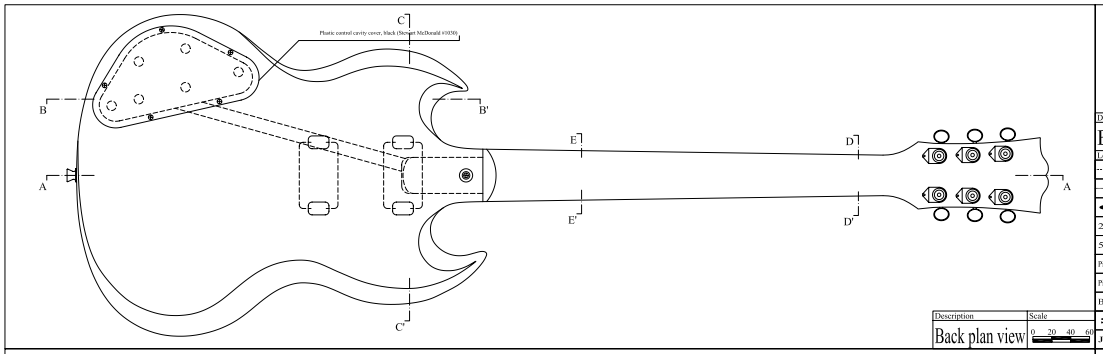

Description	Scale
Back plan view	0 20 40 60

Description	
Electronics	
Legend:	
	Black wire
	Braided metal wire
	0.05mfd capacitor
250K	250K LOG potentiometer
500K	500K LOG potentiometer
Pickup 1	Gibson 498T "rhythm" humbucker
Pickup 2	Gibson 498T "treble" humbucker
Bridge	Bridge (connected to ground)
	3-way toggle switch
Jack	Mono jack

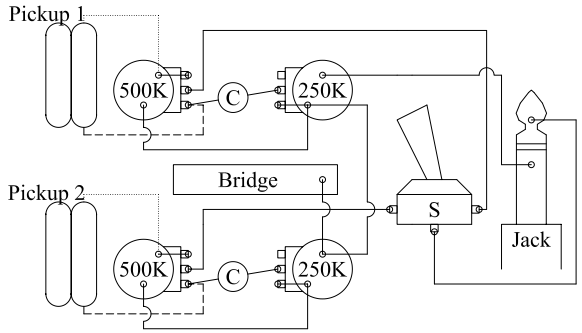

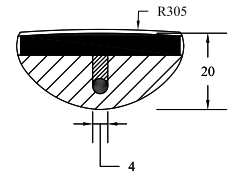

Description	Scale
Section DD'	0 5 10 15

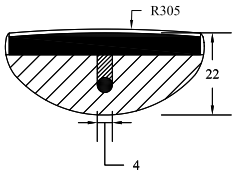

Description	Scale
Section EE'	0 5 10 15

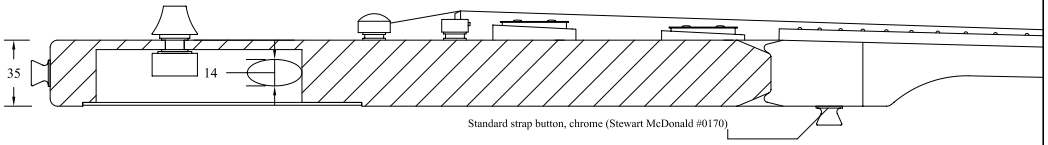

Description	Scale
Section BB'	0 10 20 30

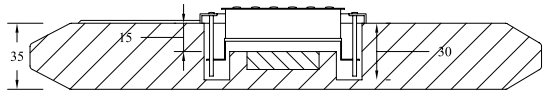

Description	Scale
Section CC'	0 10 20 30

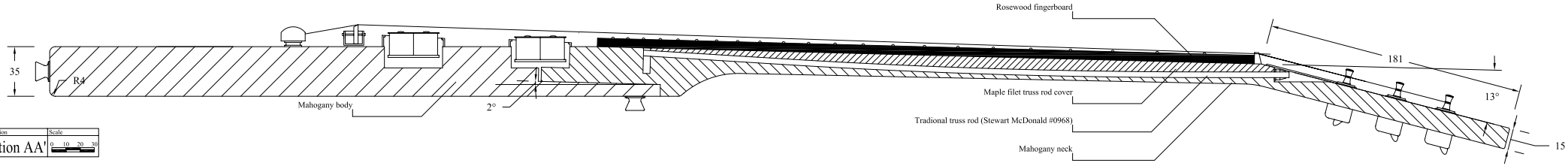

Description	Scale
Section AA'	0 10 20 30

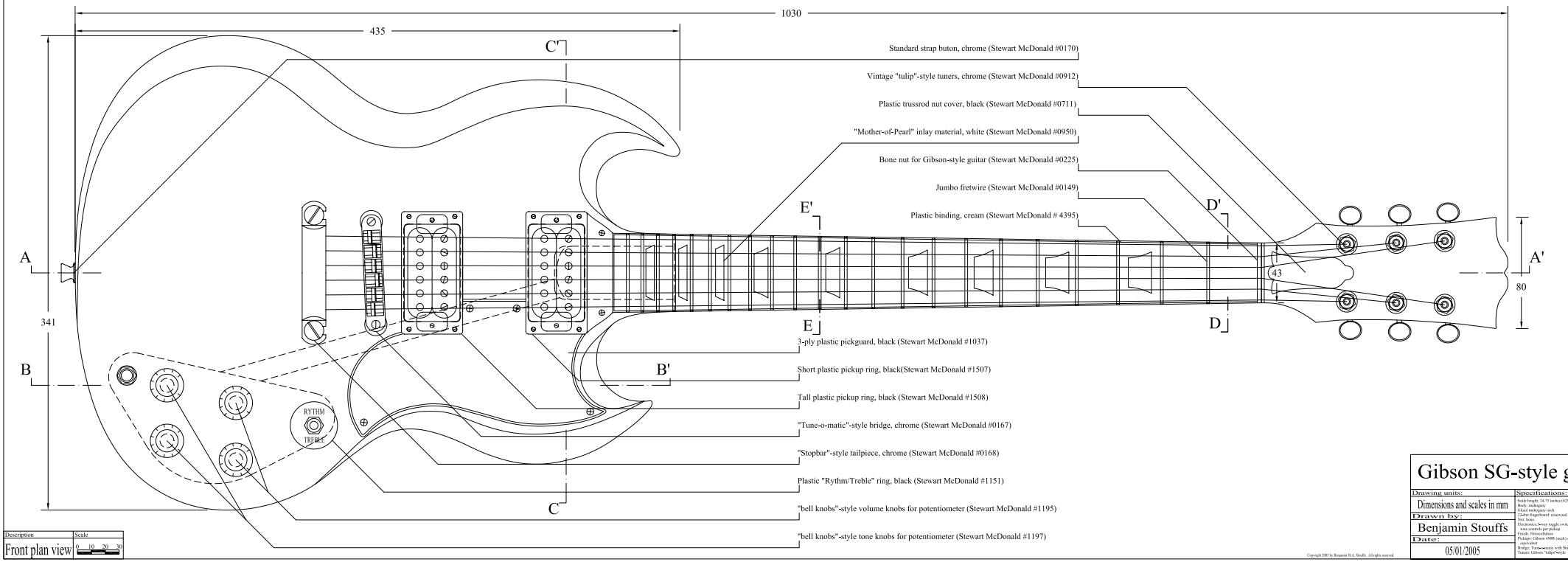

Description	Scale
Front plan view	0 10 20 30

Gibson SG-style guitar

Drawing units:	Specifications:
Dimensions and scales in mm	Scale length: 24,75 inches (628 mm) Body: mahogany Glued mahogany neck 12-fret fingerboard: rosewood Six frets Electronics: 3-way toggle switch, individual volume and tone controls per pickup Finish: Nitrocellulose Pickups: Gibson 498R (neck) & Gibson 498T (bridge) or equivalent Bridge: Tune-o-matic with Stopbar tailpiece Tuners: Gibson "tulips"-style
Drawn by:	
Benjamin Stouffs	
Date:	
05/01/2005	

Copyright 2005 by Benjamin M.A. Stouffs. All rights reserved.