LAST REFNUM USED: R176 C167 CR54 J173 V6 Q11 VR16

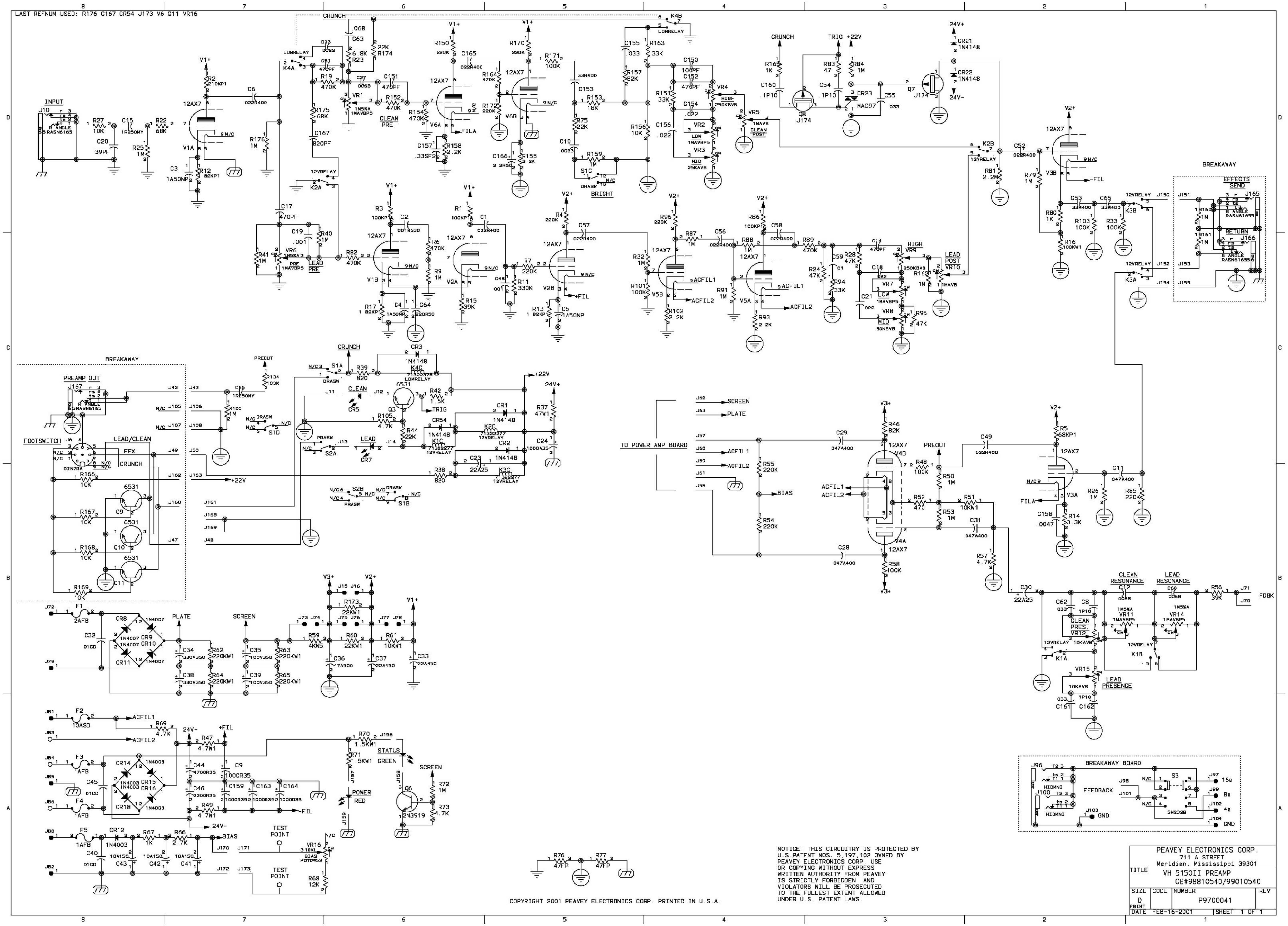
INPUT
J10
CRUNCH
LOWRELAY
12VRELAY
CLEAN PRE
LEAD PRE
BRIGHT
CLEAN POST
LEAD POST
HIGH
LOW
MID
TRIG
+22V
24V+
24V-
12AX7
V1A
V1B
V2A
V2B
V3A
V3B
V4A
V4B
V5A
V5B
V6A
V6B
ACFIL1
ACFIL2
FILA
-FIL
+FIL
BREAKAWAY
EFFECTS SEND
RETURN
PREAMP OUT
FOOTSWITCH
LEAD/CLEAN
EFX
CRUNCH
C LEAN
LEAD
TO POWER AMP BOARD
SCREEN
PLATE
BIAS
PREOUT
CLEAN RESONANCE
LEAD RESONANCE
CLEAN PRES.
LEAD PRESENCE
FDBK
BREAKAWAY BOARD
FEEDBACK
15Ω
8Ω
4Ω
GND
STATLS GREEN
POWER RED
TEST POINT
V1+
V2+
V3+
8
7
6
5
4
3
2
1
D
C
B
A

NOTICE: THIS CIRCUITRY IS PROTECTED BY U.S.PATENT NOS. 5,197,102 OWNED BY PEAVEY ELECTRONICS CORP. USE OR COPYING WITHOUT EXPRESS WRITTEN AUTHORITY FROM PEAVEY IS STRICTLY FORBIDDEN AND VIOLATORS WILL BE PROSECUTED TO THE FULLEST EXTENT ALLOWED UNDER U.S. PATENT LAWS.

COPYRIGHT 2001 PEAVEY ELECTRONICS CORP. PRINTED IN U.S.A.

PEAVEY ELECTRONICS CORP.
711 A STREET
Meridian, Mississippi 39301

TITLE VH 5150II PREAMP
CB#98810540/99010540

SIZE	CODE	NUMBER	REV
D		P9700041	

PRINT DATE FEB-16-2001 | SHEET 1 OF 1

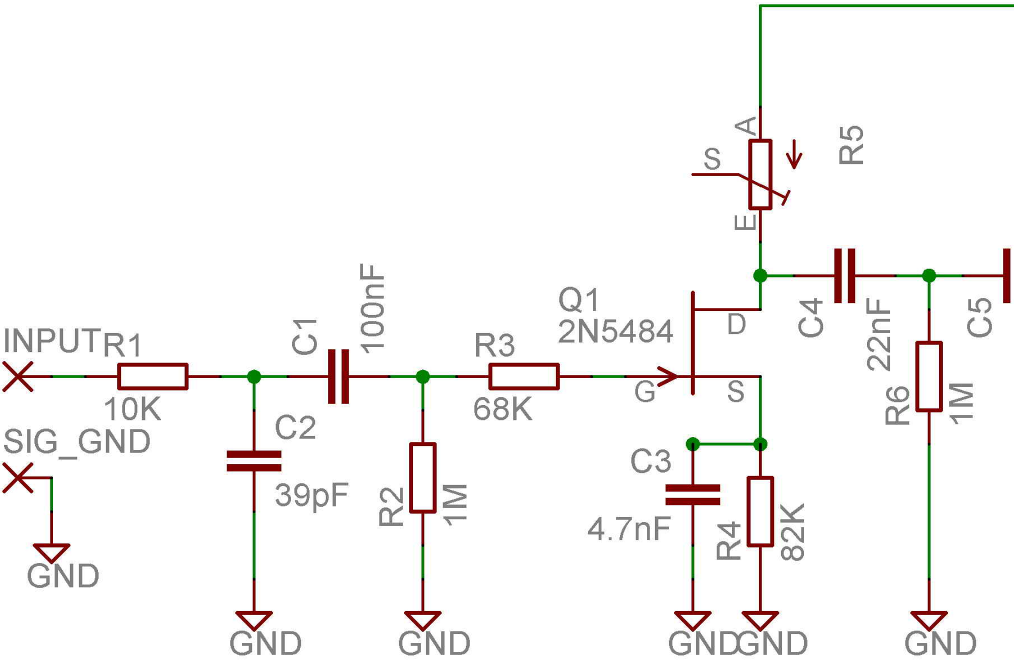
INPUT
R1
10K
SIG_GND
GND
C2
39pF
GND
C1
100nF
R2
1M
GND
R3
68K
Q1
2N5484
G
D
S
C3
4.7nF
GND
R4
82K
GND
A
S
E
R5
C4
22nF
R6
1M
GND
C5

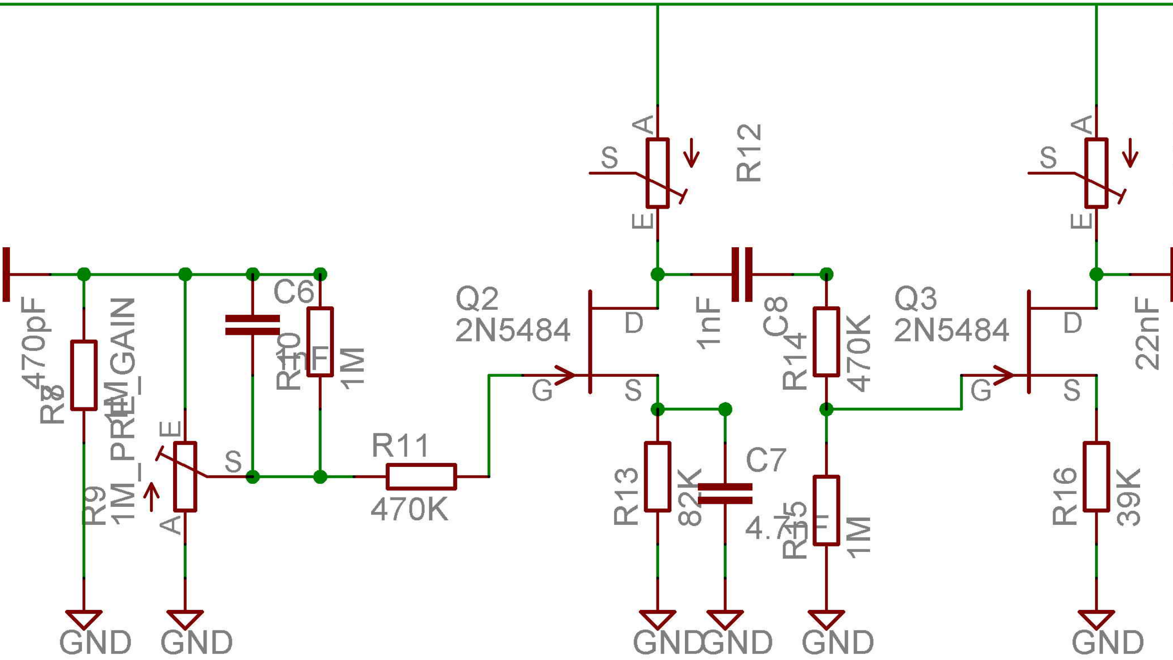
470pF
R8
PRE_GAIN
R9
1M_PRE
E
S
A
C6
R10
1nF
1M
R11
470K
Q2
2N5484
G
D
S
A
S
E
R12
1nF
C8
R13
82K
C7
4.7
R14
470K
R15
1M
Q3
2N5484
G
D
S
A
S
E
22nF
R16
39K
GND
GND
GND
GND
GND
GND

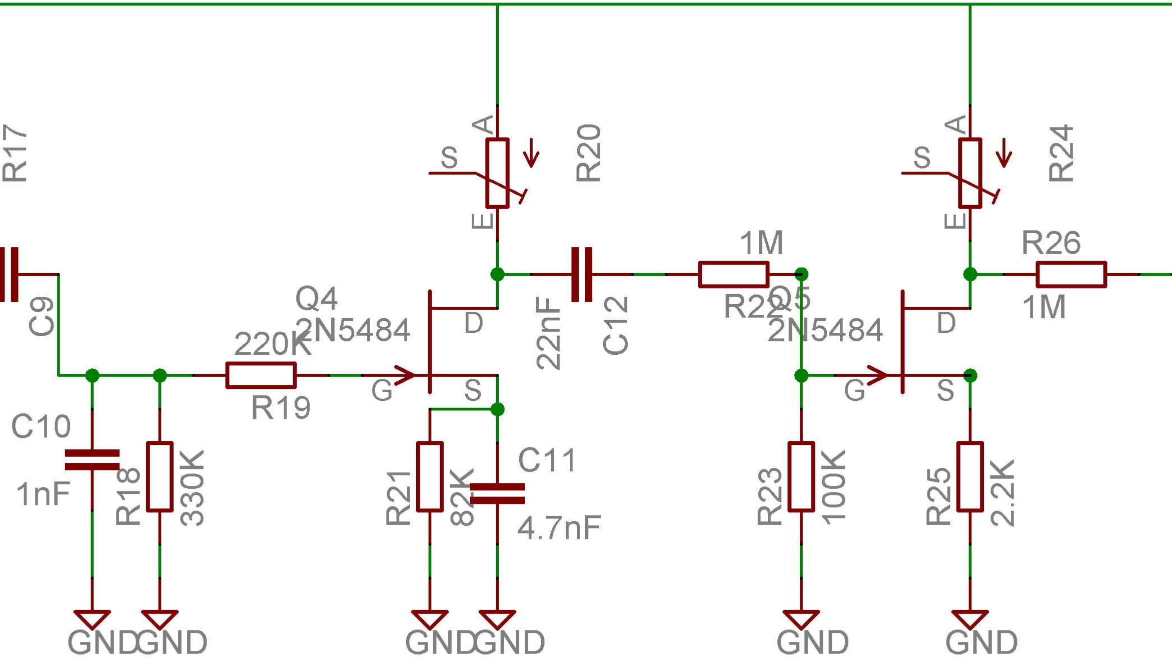
R17
C9
C10
1nF
R18
330K
GND
GND
220K
R19
Q4
2N5484
G
D
S
A
S
E
R20
R21
82K
C11
4.7nF
GND
GND
22nF
C12
1M
R22
Q5
2N5484
G
D
S
R23
100K
GND
A
S
E
R24
R26
1M
R25
2.2K
GND

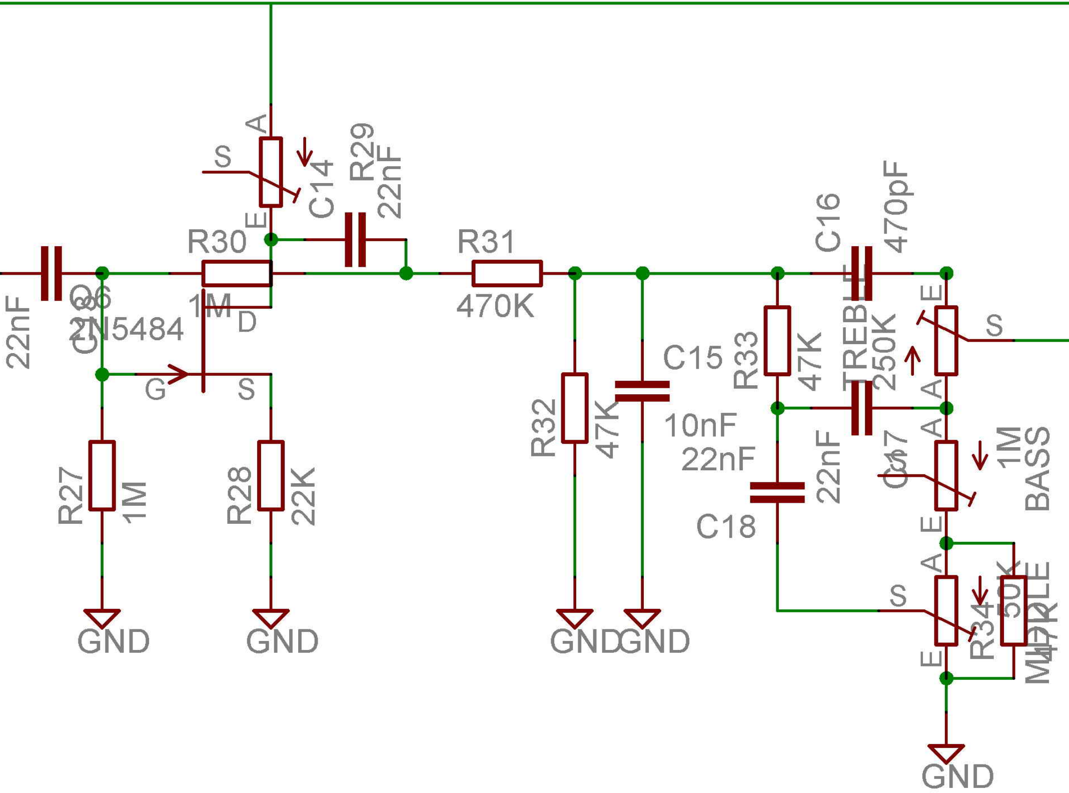
A
S
E
C14
R29
22nF
R30
1M
C13
22nF
Q6
2N5484
D
G
S
R27
1M
R28
22K
GND
GND
R31
470K
R32
47K
C15
10nF
GND
GND
C16
470pF
R33
47K
TREBLE
250K
E
S
A
A
C17
22nF
1M
BASS
E
C18
22nF
A
S
R34
50K
MIDDLE
4.7K
E
GND

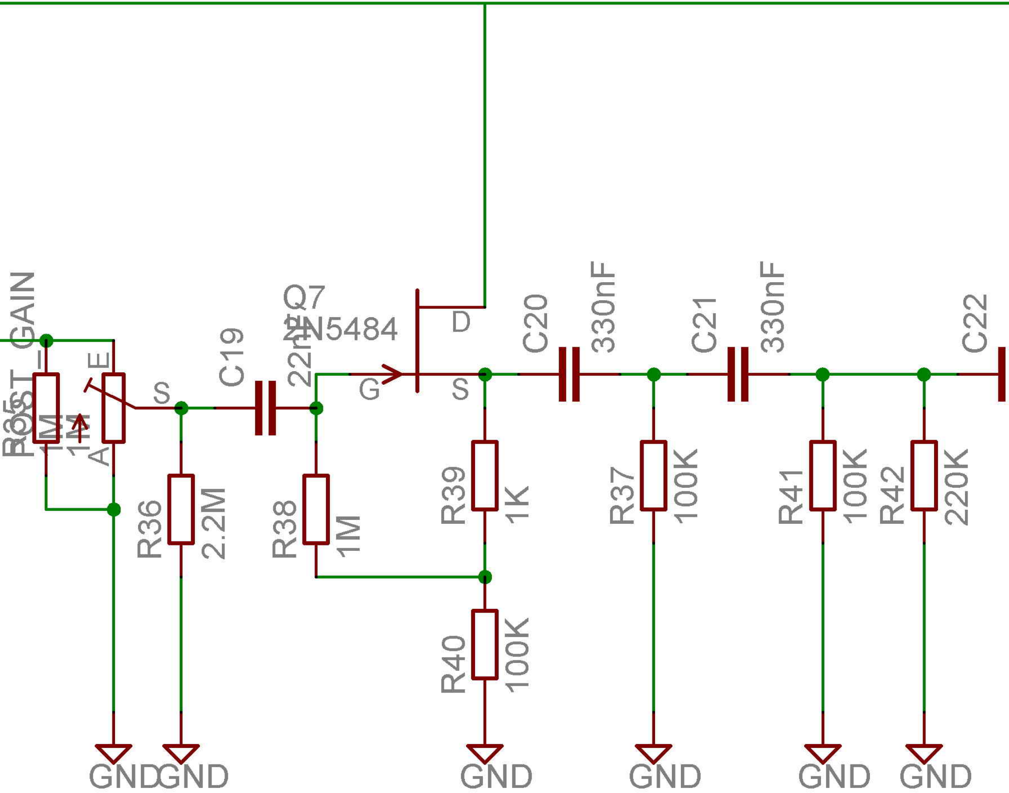
BOOST_GAIN
R35
1M
POT
1M
E
A
S
C19
22nF
Q7
2N5484
G
D
S
C20
330nF
C21
330nF
C22
R36
2.2M
R38
1M
R39
1K
R40
100K
R37
100K
R41
100K
R42
220K
GND
GND
GND
GND
GND
GND

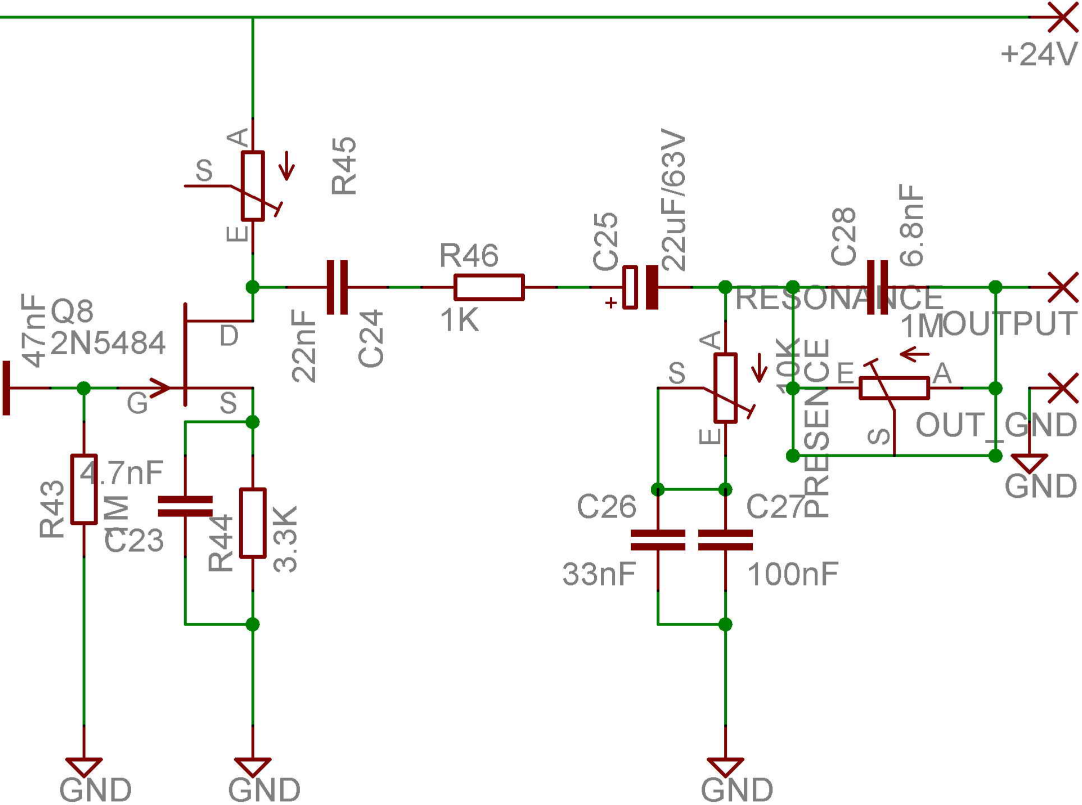
+24V
A
S
R45
E
Q8
2N5484
47nF
D
G
S
22nF
C24
R46
1K
C25
22uF/63V
+
C28
6.8nF
RESONANCE
1M
OUTPUT
A
S
E
10K
PRESENCE
E
A
S
OUT_GND
GND
R43
1M
4.7nF
C23
R44
3.3K
C26
33nF
C27
100nF
GND
GND
GND