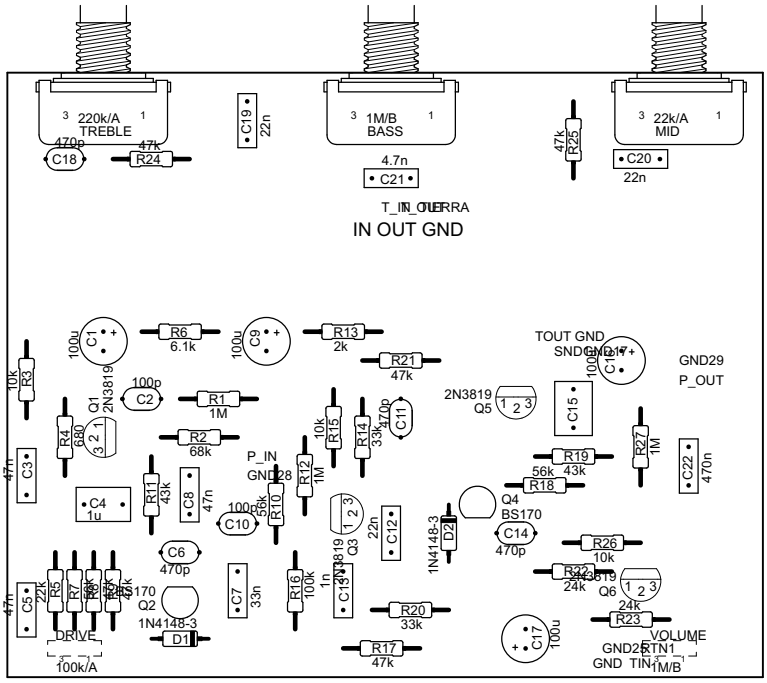

220k/A
TREBLE
1M/B
BASS
22k/A
MID
C18
470p
R24
47k
C19
22n
C21
4.7n
R25
47k
C20
22n
IN OUT GND
C1
100u
R6
6.1k
C9
100u
R13
2k
R21
47k
TOUT GND
GND27
GND29
P_OUT
R3
10k
Q1
2N3819
C2
100p
R1
1M
R4
680
R2
68k
P_IN
GND28
C3
47n
C4
1u
R11
43k
C8
47n
R12
1M
R15
10k
R14
33k
C11
470p
2N3819
Q5
C15
R19
56k
43k
R18
R27
1M
C22
470n
Q4
BS170
C14
470p
R26
10k
D2
1N4148-3
C10
100p
R10
56k
C12
22n
Q3
2N3819
C6
470p
C5
47n
R5
22k
R7
R16
100k
C13
1n
R20
33k
R22
24k
Q6
2N3819
24k
R23
C17
100u
R17
47k
VOLUME
GND25
GND
TIN
POTN1
1M/B
Q2
BS170
1N4148-3
D1
DRIVE
100k/A