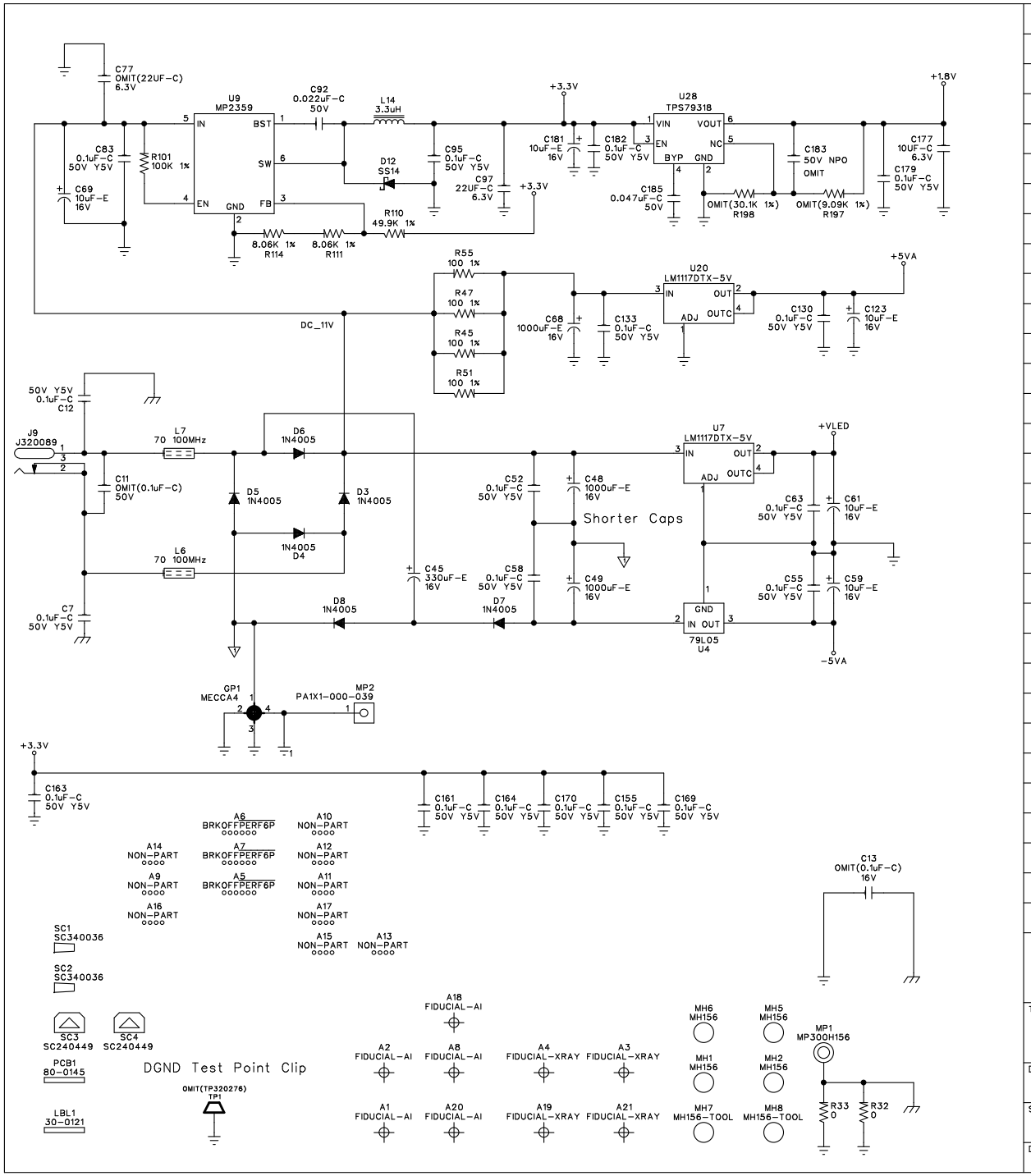

REV	DESCRIPTION	ECN #	INIT	DATE
A4	Changed DS1-5 to 70-0225/0224. Removed SC5,6,7	E201 000892	PSC	5-27-11
A3	Changed U21 to 3.0V Seiko 72-0380	E201 000743	PSC	3-3-11
A2	Changed U21 to a 2.7V part that is currently available	E201 000373	RWD	8-25-10
A1	POPULATE OPTO BOARD ON MAIN PANEL AND ELIMINATE USE OF 80-6006 OPTO BOARD.	36089	MTB	4-9-08
A0	PRODUCTION RELEASE	36009	MTB	2-29-08

REVISION HISTORY

HARMAN MUSIC GROUP

8760 South Sandy Parkway Sandy Utah 84070

TITLE: DigiTech RP500

GUITAR FLOOR PROCESSOR

DESIGNER:	ENGINEER:	
M. BYBEE	PAUL HOWARD	
SIZE: A	DRAWING NO: 05-0145	REVISION A4
DATE: 5-27-11	FILENAME: 050145A4.SCH	SHEET: 1 OF 8