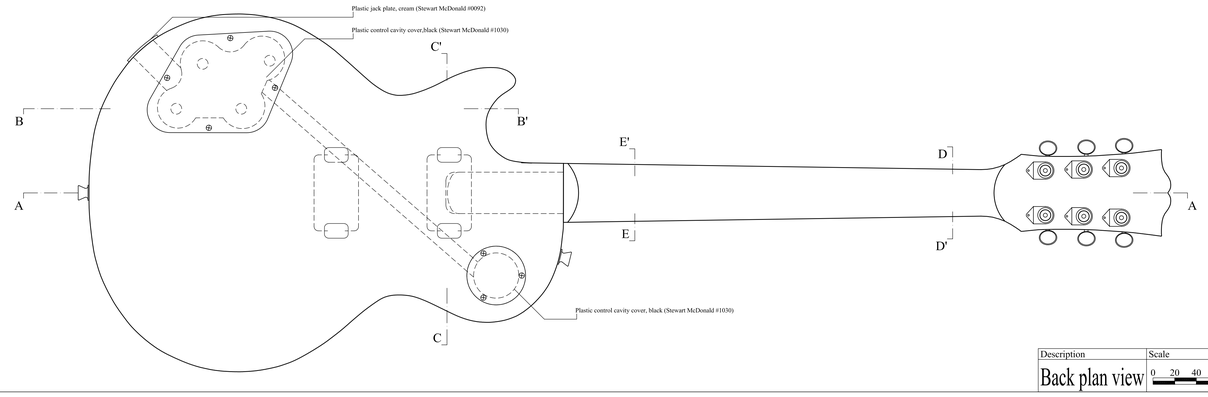

Description: Back plan view — Scale: 0 20 40 60

Description	
Electronics	
Legend:	
Black wire	
Braided metal wire	
0.05mfd capacitor	
250K	250K LOG potentiometer
500K	500K LOG potentiometer
Pickup 1	498 Gibson "rythm" humbucker
Pickup 2	498T Gibson "treble" humbucker
Bridge	Bridge (connected to ground)
S	3-way toggle switch
Jack	Mono jack

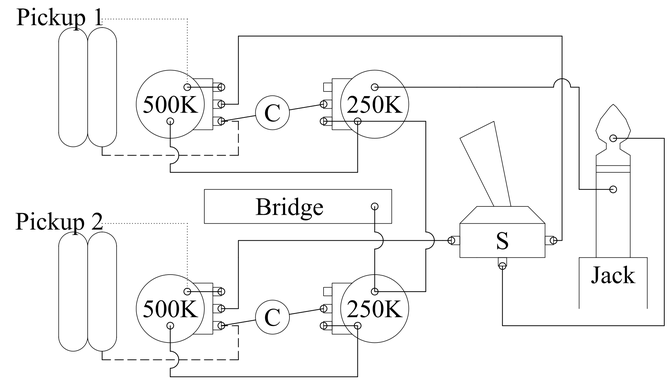

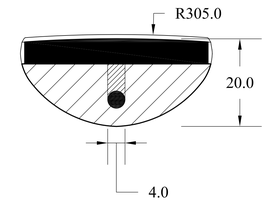

Description: Section DD' — Scale: 0 5 10 15

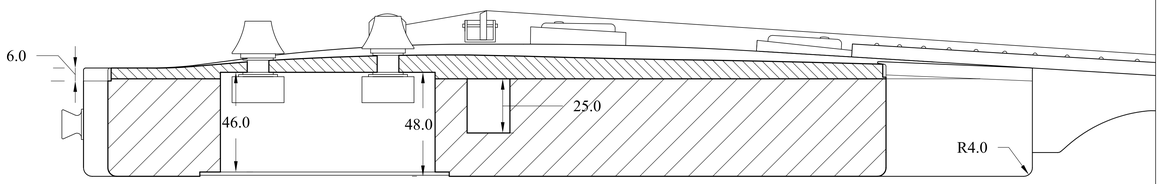

Description: Section BB' — Scale: 0 10 20 30

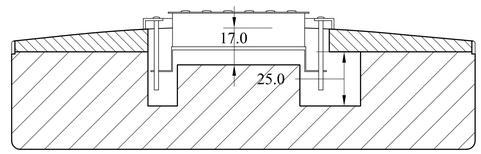

Description: Section CC' — Scale: 0 10 20 30

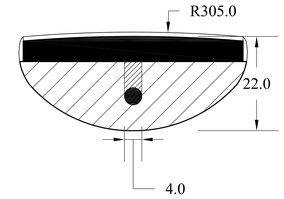

Description: Section EE' — Scale: 0 5 10 15

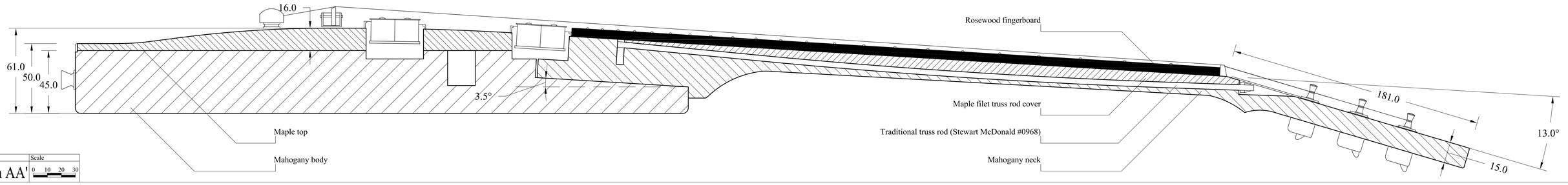

Description: Section AA' — Scale: 0 10 20 30

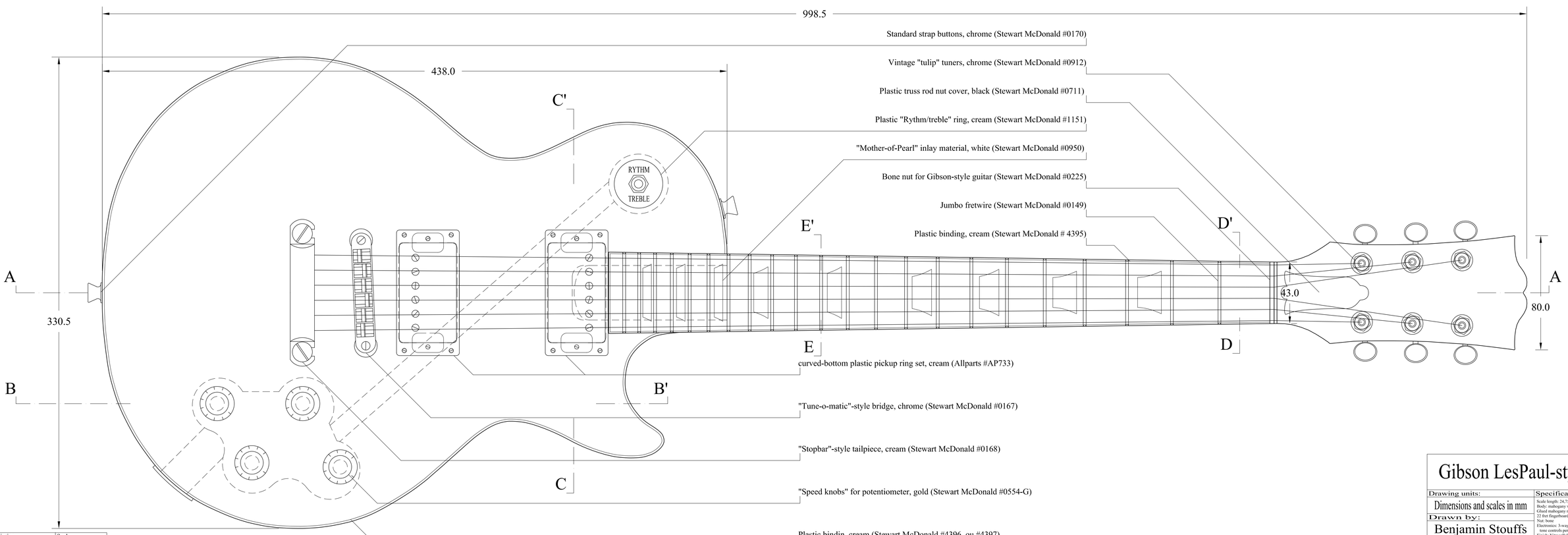

Description: Front plan view — Scale: 0 10 20 30

Gibson LesPaul-style guitar

Drawing units:	Specifications:
Dimensions and scales in mm	Scale length: 24.75 inches (629 mm) Body: mahogany with maple top Glued mahogany neck 22 fret fingerboard: rosewood Nut: bone Electronics: 3-way selector switch, individual volume and tone controls per pickup Finish: Nitrocellulose Pickups: Gibson 498R (neck) & Gibson 498T (bridge) or equivalent Bridge: Tune-o-matic with Stopbar tailpiece Tuners: Gibson "tulips"-style
Drawn by:	
Benjamin Stouffs	
Date:	
05/01/2005	

Copyright 2005 by Benjamin M.A. Stouffs. All rights reserved.